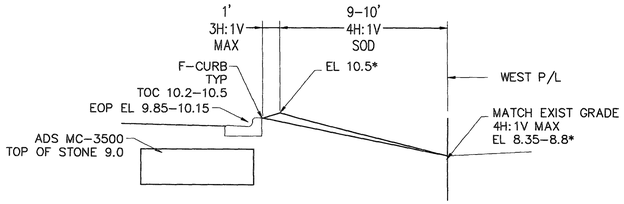

West Property Line
Section

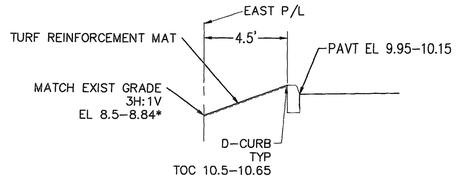

South Property Line
Section

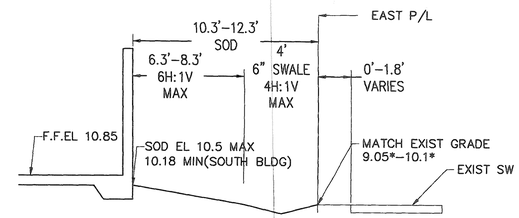

East Property Line
General Building Section

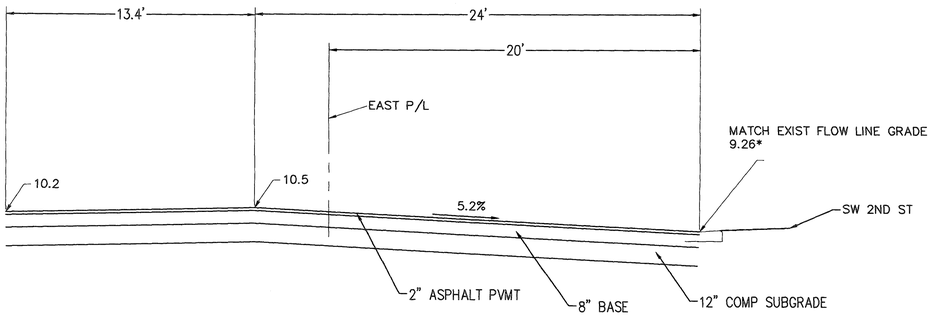

SW 2ND ST Driveway
Section B-B

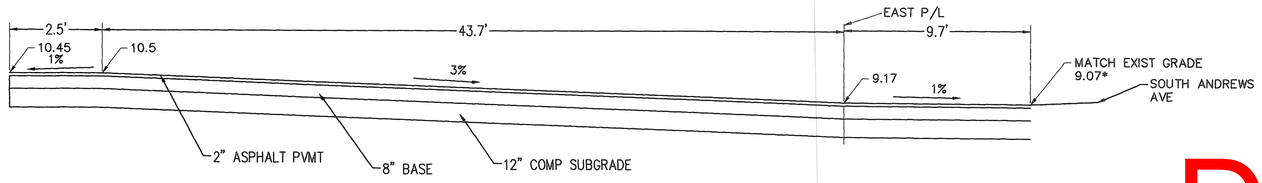

South Andrews AVE Driveway
Section A-A

REVISIONS

Jeff H. Iravani, Inc.
Consulting Engineers
1934 COMMERCE LANE, SUITE 5
JUPITER, FLORIDA 33458
TEL: (561) 575-6030
FAX: (561) 575-6088
EMAIL: JHI@bellsouth.net
WEBSITE: www.JHIinc.com

201 SW 12th Ave
Pompano Beach, Florida

Grading, Paving & Drainage Details

DATE	SCALE	DESIGNED BY	DRAWN BY	JOB NO.
01/28/2023	NTS	JBI	JBI	2208-1411

SEAL
SHEET NO.
C-8

DRC
PZ22-12000096
07/19/2023